L - TECH®

FH370LGICA

3.7" Incandescent Line Voltage IC AT New Construction Housing 2 Hours Fire Rated - GU10 LED Lamp

Dimensions

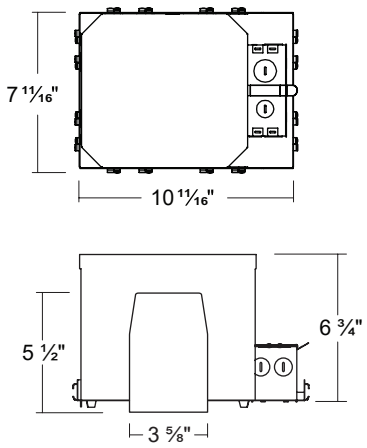

DESCRIPTION

- 2 Hours Fire Rated UL Listed (UL 1598 / UL 263)
- Air Tight (ASTM Standard E283-04)
- Pre-installed 3port push in quick connector
- 13-5/8" to 25" Swivel Hanger Bar with pre-installed nails
- Housing adjusts from 1-1/2" to accommodate various ceiling thickness
- GU 10 Socket for use GU 10 MAX. 25W LED Lamp
- Spacing of luminaires not to exceed one per 25 sq ft of ceiling area with min separation of 3 ft between luminaires
- **2hr Floor ceiling** - Luminaire provides up to 2 hours of protection in L500, L505, L511, L536, L538, L541, L556, L577, M500, M510, M521 and M543 Floor-Ceiling Designs
- **1hr Floor ceiling** - Luminaire provides up to 1 hour of protection in L500, L505, L511, L536, L538, L541, L556, L577, M500, M510, M521 and M543 Floor-Ceiling Designs
- **1hr Roof ceiling** - 1 hr fire rated P500-Series Roof-Ceiling designs

INSTALLATION BY SWIVEL BAR HANGER

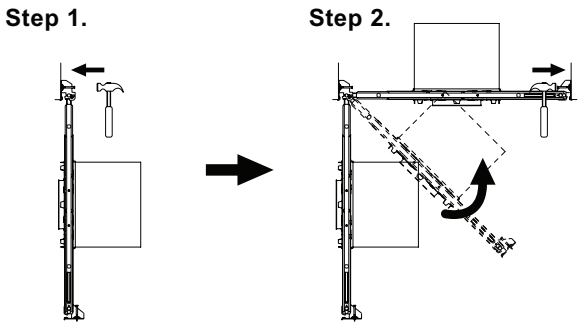

FEATURES

Plaster Frame
- Galvanized steel plaster frame with integral bar hanger receivers
- The housing can be removed from plaster frame to provide access to the J-box

Housing
- Die formed galvanized steel housing with noncombustible fiber insulation

Junction Box
- Compact galvanized steel junction box with 24in3 internal volume
- One 1-1/8", one 1/2", three 7/8" knockouts and four Romex pryouts with strain relief
- Accepts 14-2, 14-3, 12-2, 12-3 U.S. and 14-2, 14-3, 12-2 Canadian NM cable
- Three 3-port push wire nuts with clear caps for quick and reliable mains voltage connections

Thermal Protector
- Self resetting thermal protector deactivates fixture if overheating occurs due to improper lamping or misapplied insulation.

Bar Hanger
- Swivel-headed bar hangers with pre-installed nail support housing at any point along span
- Captive nail penetrates standard and engineered lumber
- Adjusts from 13-5/8" to 25" wide
- Can be repositioned along short side or long side of plaster frame

STC & IIC
- Sound transmission class (STC) and Impact Insulation class (IIC) tested by a certified acoustical testing lab. STC and IIC comply redommendations for reducing noise including spoken word and others in multifamily and mixed-use structures

Listings
- cULus Listed for Damp Location
- cULus Listed for Wet Location (with specified trims)
- cULus Listed for Feed Through
- Certified under ASTM-E283 for Air tight construction

L-TECH CORPORATION
www.L-Techcorp.com

CHINA : SHAOGANGTOU DISTRICT, QIAOTOU TOWN, DONGGUAN CITY, GUANGDONG 523536
TEL : 86-769-83423455 / FAX : 86-769-83423173 E-mail : ltech@vip.163.com

KOREA : A-1804, WOOLIM BLUE NINE, 240-21, YEOMCHANG-DONG, GANGSEO-GU, SEOUL, 157-779
TEL : 82-2-2666-2917~8 / FAX : 82-2-2666-7052 E-mail : ltech77@ltechcorp.com

COMPATIBLE TRIMS_Damp Location

TL350 Smooth

- **Incandescent**
  GU10, 25W
- **LED**
  GU10, 25W

TL353 Stepped Baffle

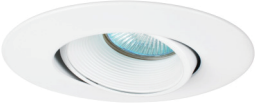

- **Incandescent**
  GU10, 25W
- **LED**
  GU10, 25W

TL355 Surface Gimbal

- **Incandescent**
  GU10, 25W
- **LED**
  GU10, 25W

TL358 Frosted Shower

- **Incandescent**
  GU10, 25W
- **LED**
  GU10, 25W

TL3530 Adjustable Smooth

- **Incandescent**
  GU10, 25W
- **LED**
  GU10, 25W

TL3543 Square Round Gimbal

- **Incandescent**
  GU10, 25W
- **LED**
  GU10, 25W

L-TECH CORPORATION
www.L-Techcorp.com

CHINA : SHAOGANGTOU DISTRICT, QIAOTOU TOWN, DONGGUAN CITY, GUANGDONG 523536
TEL : 86-769-83423455 / FAX : 86-769-83423173 E-mail : ltech@vip.163.com

KOREA : A-1804, WOOLIM BLUE NINE, 240-21, YEOMCHANG-DONG, GANGSEO-GU, SEOUL, 157-779
TEL : 82-2-2666-2917~8 / FAX : 82-2-2666-7052 E-mail : ltech77@ltechcorp.com